CATEGORY	DESCRIPTION	P/N #
CONNECTOR	RCA Jack, 3*2 Ports, R/A, T/H. With Shielding	RJ019R-321X1-XX0C

RJ019R-321X1-XX0C
- 表示CPC
- Color Scheme
- With Date Code
- Material & Plating

Table 1

X	Washer Material	
6	PBT UL94V-0	
2	ABS UL94-HB	

REV.	ECN NO	DESCRIPTION	REVISED	DATE
R01	————	New Release	JXM	2009.12.04

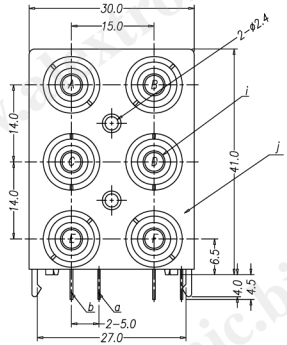

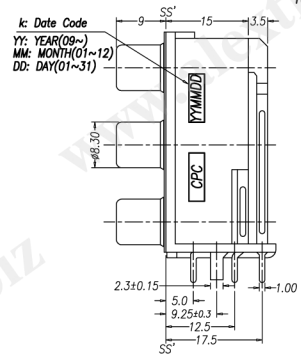

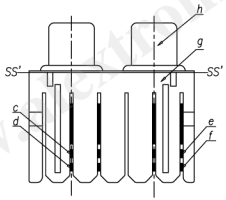

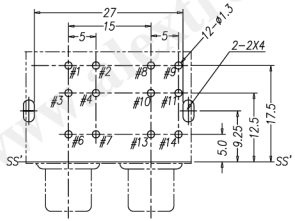

Recommend PCB Layout
(Jack Top View)
Tolerance: ±0.05mm
Recommend PCB THICKNESS:1.6mm

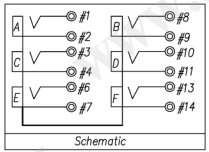

Schematic

SPECIFICATION
1. Voltage and Current Rating: 12V & 1A
2. Contact resistance: 30mΩ MAX
3. Insulation resistance: 100MΩ MIN @ DC500V
4. Withstand voltage: 500VAC for 1min
5. Insertion Force: 3Kgf MAX
6. Extraction Force: 0.3Kgf MIN
7. Withdraw Force for Center Contact: 0.08Kgf MIN
   (Use a OD=3.2±0.005mm, Length=14±0.2mm Gauge Plug)
8. Terminal Strength: The terminal shall be capable of withstanding a force of 3Kgf applied in any direction for 0.5 secs without lossing and breakdown
9. Life test: 1,500 cycles
10. Temperature Range: -25°C~70°C
11. To conform with the"QC-03-045"&"RoHS DIRECTIVE"
12. Solder heat resistance:wave soldering 260° c 5 secs

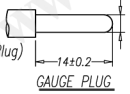

GAUGE PLUG

PROPOSAL ONLY

NO.	PART NAME	Q'TY	MATERIAL	PLATING & COLOR	REMARK
k	Ink	1	Domino IR-270BK & MC-270-BK	Black	
j	Shielding Plate	1	Brass, T=0.3mm	40u"Min CuSn Plated over 50u" Ni Plated Overall	
i	Washer	6	See Table 1	See Color Scheme	
h	Outer Contact	6	Brass,T=0.4mm	40u"Min CuSn Plated over 50u" Ni Plated Overall	
g	Housing	1	ABS UL94-HB	See Color Scheme	
f	Terminal #9,2	2	Brass,T=0.4mm	100u"Min Tin Plated over 50u" Ni Plated Overall	
e	Terminal #11,4	2	Brass,T=0.4mm	100u"Min Tin Plated over 50u" Ni Plated Overall	
d	Terminal #1,8	2	Brass,T=0.5mm	100u"Min Tin Plated over 50u" Ni Plated Overall	
c	Terminal #3,10	2	Brass,T=0.5mm	100u"Min Tin Plated over 50u" Ni Plated Overall	
b	Terminal #6,13	2	Brass,T=0.5mm	100u"Min Tin Plated over 50u" Ni Plated Overall	
a	Terminal #7,14	2	Brass,T=0.4mm	100u"Min Tin Plated over 50u" Ni Plated Overall	

COLOR SCHEME

XX	Housing	A	B	C	D	E	F
1Y	Black	Orange (1505C)	Red (032C)	White	Process Blue C	Red (032C)	Green (361C)

Product Drawing
TERAPRO

UNLESS OTHERWISE SPECIFED TOLERANCES

DECIMALS:
X :±0.5
X.X :±0.3
X.XX :±0.2

ANGLES:
X :±2°
X.X :±1°

SCALE:free	UNIT: mm	DWG.NO:
SIZE: A3	PAGE:1 OF 1	REV:R01

APPROVED BY	CHECKED BY	PREPARED BY
WYX	Pengjie	JXM

CUSTOMER COPY

www.alexelectronic.biz